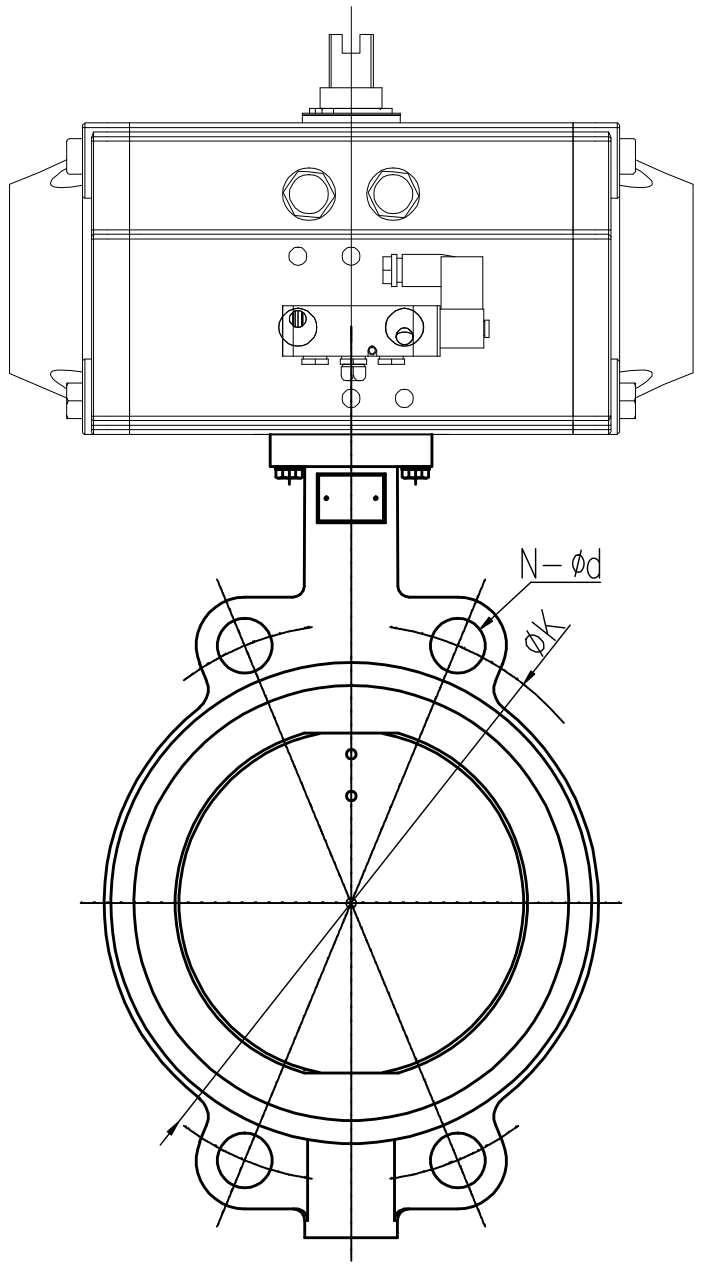

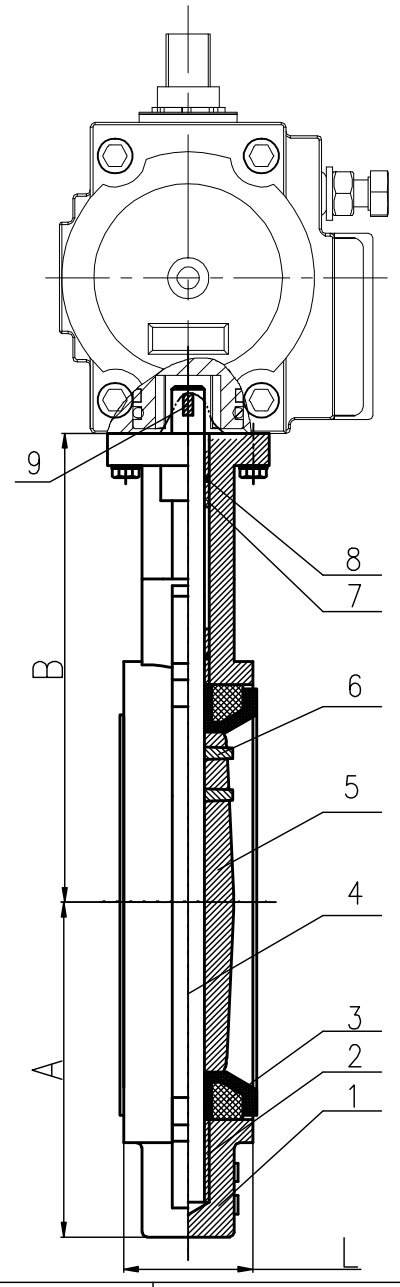

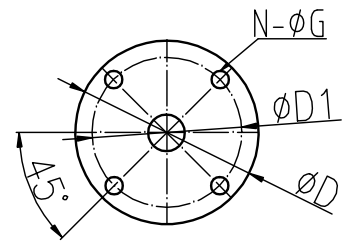

SIZE		A	B	L	ANSI 150B		DIN PN 10		DIN PN 16		JIS 10K		ISO 5211			Top Flange
mm	in				øK	N-ød	øK	N-ød	øK	N-ød	øK	N-ød	øD	øD1	N-øG	
40	1.5''	67	141	33	98.5	4-ø16	110	4-ø18	110	4-ø18	105	4-ø19	65	50	4-ø8	F05
50	2''	67	141	43	120.6	4-ø19	125	4-ø18	125	4-ø18	120	4-ø19	65	50	4-ø8	F05
65	2 1/2''	75	151	46	139.7	4-ø19	145	4-ø18	145	4-ø18	140	4-ø19	65	50	4-ø8	F05
80	3''	95	160	46	152.4	4-ø19	160	8-ø18	160	8-ø18	150	8-ø19	65	50	4-ø8	F05
100	4''	111	180	52	190.5	8-ø19	180	8-ø18	180	8-ø18	175	8-ø19	90	70	4-ø10	F07
125	5''	129	193	56	215.9	8-ø22.4	210	8-ø18	210	8-ø18	210	8-ø23	90	70	4-ø10	F07
150	6''	142	207	56	241.3	8-ø22.4	240	8-ø22	240	8-ø22	240	8-ø23	90	70	4-ø10	F07
200	8''	170	240	60	298.4	8-ø22.4	295	8-ø22	295	12-ø22	290	12-ø23	125	102	4-ø12	F10
250	10''	206	270	68	361.9	12-ø25.4	350	12-ø22	355	12-ø26	355	12-ø25	125	102	4-ø12	F10
300	12''	238	316	78	431.8	12-ø25.4	400	12-ø22	410	12-ø26	400	16-ø25	125	102	4-ø12	F10
350	14''	267	368	78	476.2	12-ø28.4	460	16-ø22	470	16-ø26	445	16-ø25	125	102	4-ø12	F10
400	16"	298	400	86	539.7	16-ø28.4	515	12-ø26	525	16-ø30	510	16-ø27	175	140	4-ø18	F14
450	18"	318	422	105	577.8	16-ø31.8	565	20-ø26	585	20-ø30	565	20-ø27	175	140	4-ø18	F14
500	20"	349	479	130	635	20-ø31.8	620	20-ø26	650	20-ø33	620	20-ø27	175	140	4-ø18	F14
600	24"	410	562	152	749.3	20-ø35.1	725	20-ø30	770	20-ø36	730	24-ø33	210	165	4-ø22	F16

NO	NAME	MATERIAL	QTY	
9	Key	45#	1	
8	bushing	PTFE	4	
7	O-ring	NBR	2	
6	pin	SS416	2	
5	disc	DI	1	
4	stem	SS416	1	
3	seat	EPDM	1	
2	bushing	PTFE	1	
1	body	CI	1	

TEST PRESSURE		SHELL	SEAL
	HYDROSTATIC	24bar	17.6bar
	AIR		
ATAND-ARD	DESIGN CODE	JIS B2064\DIN3354\API609	
	INSPECTION&TEST	JIS B2003\DIN3230\API598	
	END STANDARD	JIS B2212 \DIN3230\ANSI B16.1	
	FACE TO FACE	JIS B2002\DIN3202\API609	

Pneumatic Butterfly Valve

APPROVED		DWG NO.			REV
CHECKED					
DRAWN DESIGNED		SCALE		UNINT	mm

Jinerjian(Tianjin)Valve Co.,Ltd.